SL-200X15x

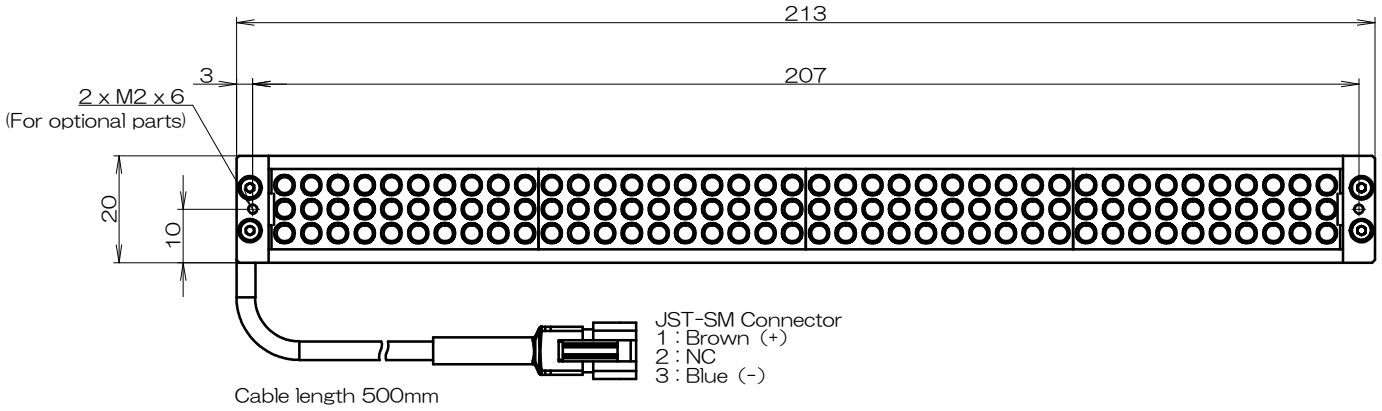

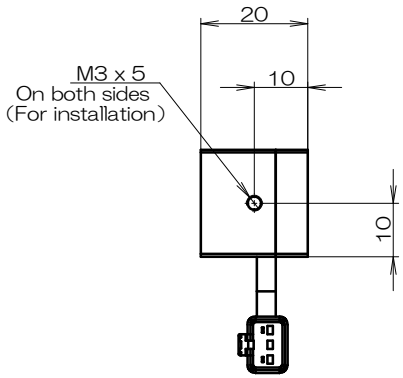

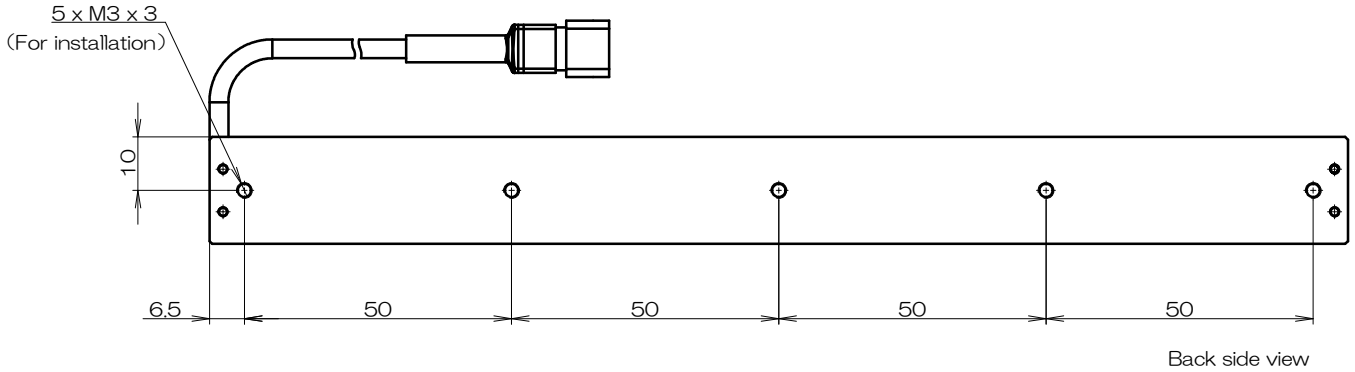

Copyright(C) 2015 CCS Asia PTE LTD. All rights reserved.
Reproduction or photocopy without permission is prohibited.

Input Voltage : DC 24V
Power Consumption : 6.1W (R,G,B,IR)
11W (W)